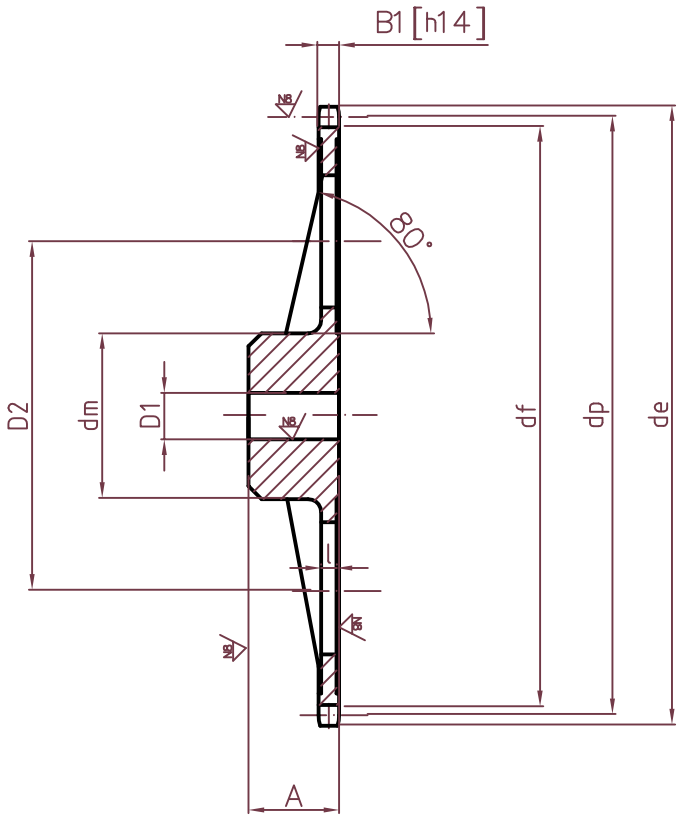


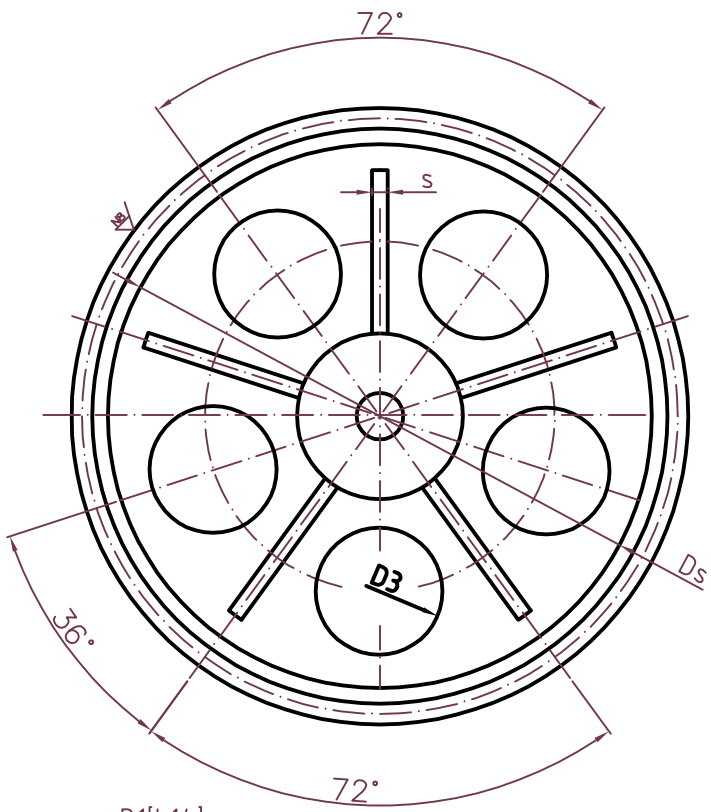


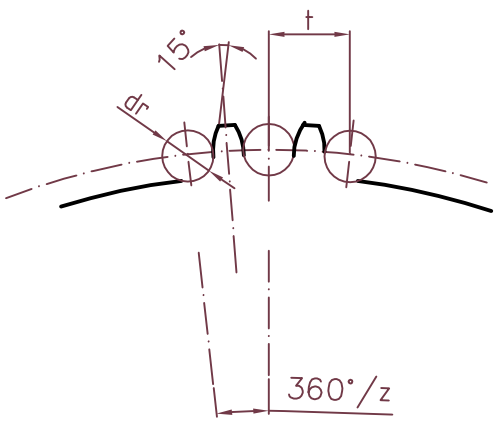


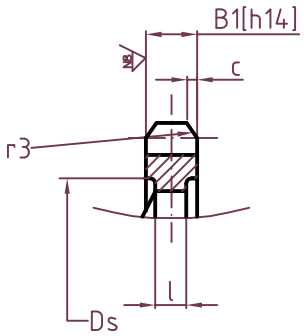


materijal: SL22 po DIN GG22

| | | | | | | | | |
|---|---|---|---|---|---|---|---|---|
| | | | | | Datum | Name | | LAN^ANIK (chain pulley;sprocket gear) |
| | | | | Bearb. | BEARBEIT | | | |
| | | | | Gepr. | GEPRÜFT | | | |
| | | | | Norm | | | | |
| | | | | | | | | xxB-1-x |
| Zust. | Änderung | Datum | Name | | | | | |